DO NOT SCALE - IF IN DOUBT ASK

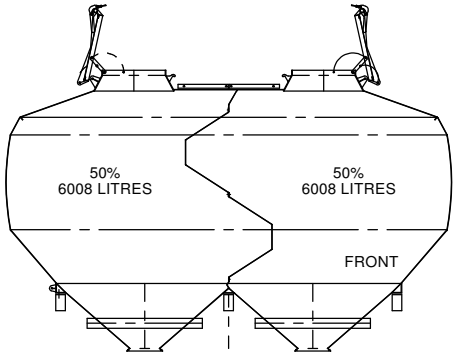

Split 1

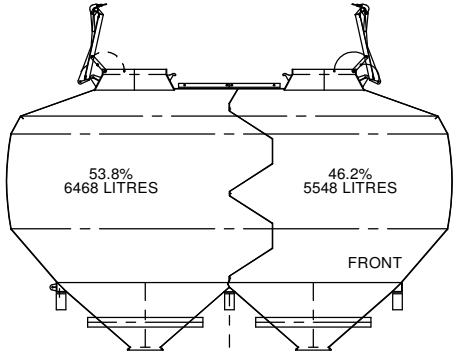

Split 2

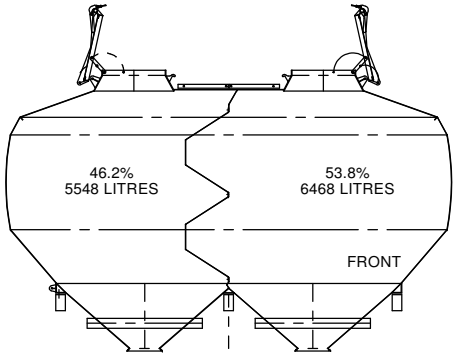

Split 3

12000 Double Bin

Total Useable Volume Given
a 25 Degree Angle of Repose is:
12016 Litres

Fabrication Note	General Tolerances		
Finish:	Linear Dimensions X ±1mm (whole numbers) X.X ±0.5mm (one decimal place) X.XX ±0.25mm (two decimal places) Angular Dimensions All Angles ±2°	This drawing is the property of Simplicity (Australia) Pty. Ltd. It must not be used for any purpose other than that for which it is supplied. Reproduction in whole or part is prohibited without written authority from Simplicity (Australia) Pty. Ltd.	DRN: DATE: APPR'D: DATE: / / SCALE: 1:56.4

SIMPLICITY (AUSTRALIA) PTY LTD
18 LOUDOUN RD DALBY 4405 PH (07) 4662 2977 FAX (07) 4660 6050

TITLE

DRAWING NUMBER **12000 Double Bin Splits** REV SHEET 1 OF 1 A4

W:\Working Directory\Bin Splits\12000 Double Bin Splits(Date Created)Monday, 5 July 2004 12:45:11 PM(Last Saved)Monday, 29 June 2009 2:22:00 PM(Last Saved by)JoshuaWalton